xpr Access

BIOPROX-EH

SURFACE MOUNT BIOMETRY AND PROXIMITY READER WITH WIEGAND OUTPUT

BIOPROX-EH is a Wiegand biometric and proximity reader for access control applications with programmable wigand output. It offers storage of up to 9500 fingerprints, it reads EM4002/4100 and HID 125kHZ compatible cards/tags and has a programmable Wiegand output (8 to 128 bits).

Management of the reader is integrated in our access control software PROS CS.

For integration with other systems we provide:

- Biomanager CS, client-server based software package for solutions without additional development
- CNV1000, TCP/RS485 communication converter for connection between software and readers

FEATURES

- Surface Mount fingerprint reader with integrated proximity (EM and HID 125 kHz compatible)
- Compatible with any Wiegand controller
- SteelCoat protective coating provides added protection of fingerprint sensor for rugged environments
- Authentication: Finger only, Finger and card, Finger or card
- Storage capacity: 9500 Fingerprints
- 1:1000 identification: 1 s
- Green and Red LED: Externally controlled
- Configuring and template management by software
- Fingerprint enrolment by desktop reader or reader itself
- Adjustable Wiegand protocol (1 to 128-bit) is utilized in the biometry reader which makes it compatible with controllers with Wiegand interface
- Wiegand Protocol adjustment done through PC
- Programmable Backlight ON/OFF
- Separate BioManager CS Software available free when used with third party controllers
- Fingerprints stored in the reader and backup copy kept in the software
- Compatibility with XPR Control Panels: EWS
- Power Supply: 12V DC
- Consumption: 120 mA max.
- IP rating: IP65
- Operating Temperature: -15°C to +50°C

ACCESORIES

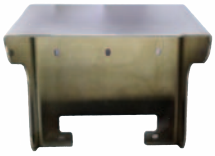

MCD-MINI

Protection cover in A304 brushed steel for double Mini range reader.

Compulsory protection for external use.

DIMENSIONS

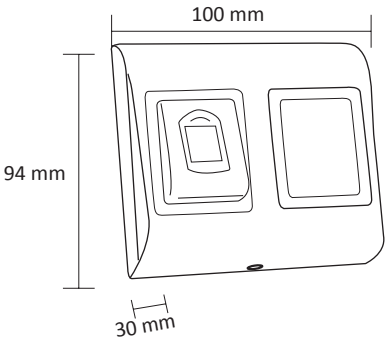

FOBS & CARDS

EM
Fobs & Cards

Ref.	PBX-1E	PBX-1C	PBX-2	PBX-2C
Features	ABS Keyfob EM4100	Leather Keyfob EM4100	0.75mm ISO Card - EM4100	2mm NISO Card - EM4100

All product specifications are subject to change without notice.

THIRD PARTY CONTROLLER - ARCHITECTURE

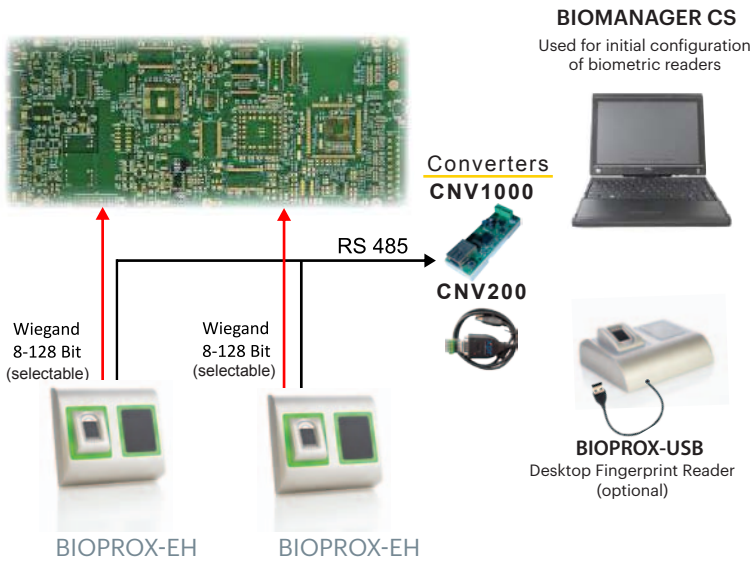

- Enrolment can be done from any biometric reader in the network or from Desktop USB Enrollment Unit.
- Finger templates can be sent to all readers in the network. Different Users can be sent to different Fingerprint Readers.

EWS CONTROLLER - ARCHITECTURE

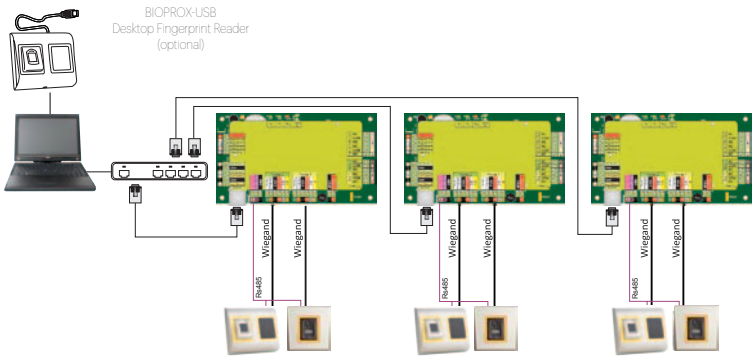

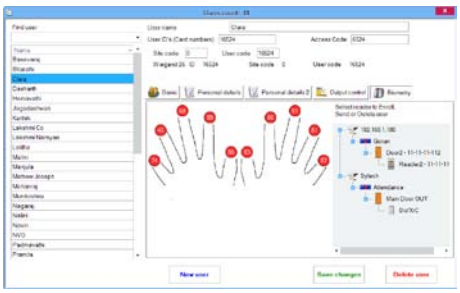

COLOURS

BIOPROXS-EH
Silver

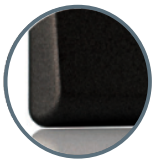

BIOPROXBK-EH
Black

BIOMANAGER CS SOFTWARE

- Windows based PC Software
- Free Fingerprint Management Software for XPR Biometric Readers

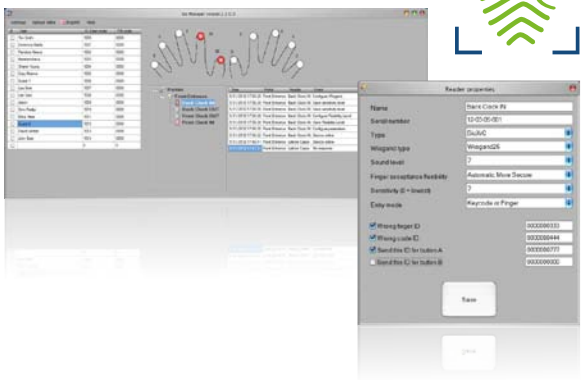

PROS CS SOFTWARE

- Client-Server Software that allows multiple users to connect to the server PC.
- User-Friendly windows Interface for simple programming, management and control of installations.

More info about the software on:
http://www.xprgroup.com/products/pros-cs/

CLIENT
PROS CS
SERVER

All product specifications are subject to change without notice.